ŁK16R-4.883

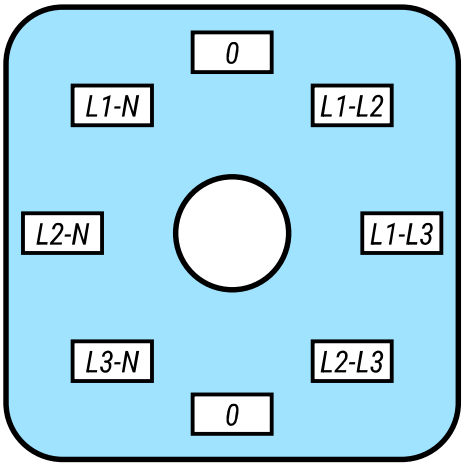

0°	45°	90°	135°	180°	225°	270°	315°
0	L1-L2	L1-L3	L2-L3	0	L3-N	L2-N	L1-N

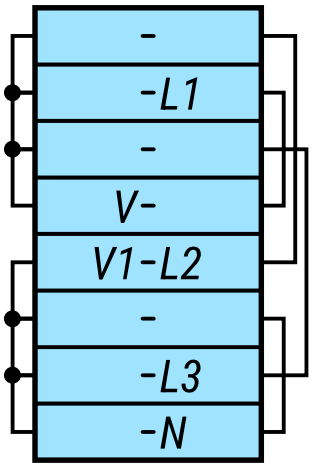

			X			X	
		X					X
					X		
	X						
	X						
					X		
		X	X				
						X	X